WEC
WHOLESALE EQUIPMENT COMPANY

5355 DISTRIPLEX FARMS DRIVE
MEMPHIS, TN. 38141
PHONE: 901.366.5767 FAX: 901.366.0093
http://www.itswec.com

1670 Series Built-in Combination Deadbolt Lock for Horizontal and Multi-Point Latch Lockers

The 1670 Series is the highest security, built-in combination deadbolt lock for lift handle, turn handle and single point latch/box horizontal latch lockers.

Ideal for open mesh lockers!

EXCLUSIVE FEATURES

- Horizontal bolt travel provides maximum engagement to latch mechanism
- Deadbolt locking is ideal for open mesh and ventilated lockers with access to back of lock
- Manual action requires the dial to be turned to relock door
- Fits all locker styles (with the exception of the Wrap Around Latch™ designed lockers)

Built-In Combination Lock Advantages

- Concealed mounting and rugged steel case deter vandalism
- Secure, three number combination is easy to dial
- Longer useful life with five different combinations – easily changed with the touch of a button, which maintains security for new students or employees
- Standard key control allows quick supervisory access
- End user registration and control charts provided to secure and simplify administration

Product Options

- Metal dial available to deter vandalism; order number 1670MD, 1671MD
- Brass escutcheon plate available to add an elegant appearance to wood locker doors; order number 1670BE or 1671BE
- Extension set available for doors with a thickness of 11/16" (17mm) to 3/4" (19mm); order number 1654-0320
- Model 1671 is available for left-handed doors
- Customize with a color – five colors to choose from.

DIMENSIONS

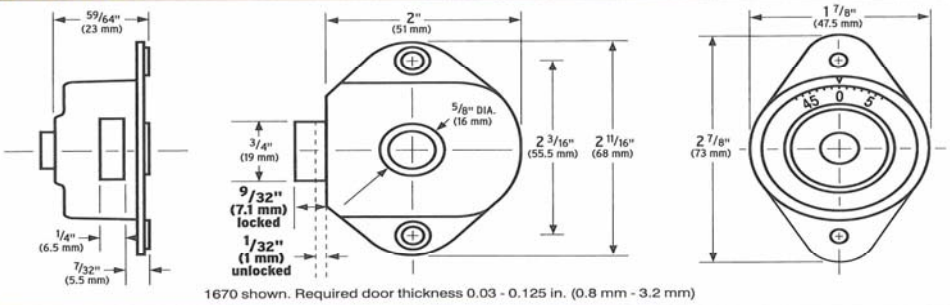

1670 shown. Required door thickness 0.03 - 0.125 in. (0.8 mm - 3.2 mm)

SPECIFICATIONS

Architectural Specifications: Locks shall be built-in combination lock with horizontally operating deadbolt. Locks shall manually unlock and re-lock. Locks shall have 5 pin tumbler cylinder for supervisory access. Locks shall have five (5) preset combinations. Locks shall have random combination change pattern; no sequentially adjacent locks shall have the same combination change pattern. Locks shall be supplied with printed Control Chart of serial numbers and combinations and text file on disc. Master Lock #1670 for lockers hinged on right. Master Lock #1671 for lockers hinged on left. For optional one-piece metal dial with non-slip finish specify Master Lock #1670MD or #1671MD.